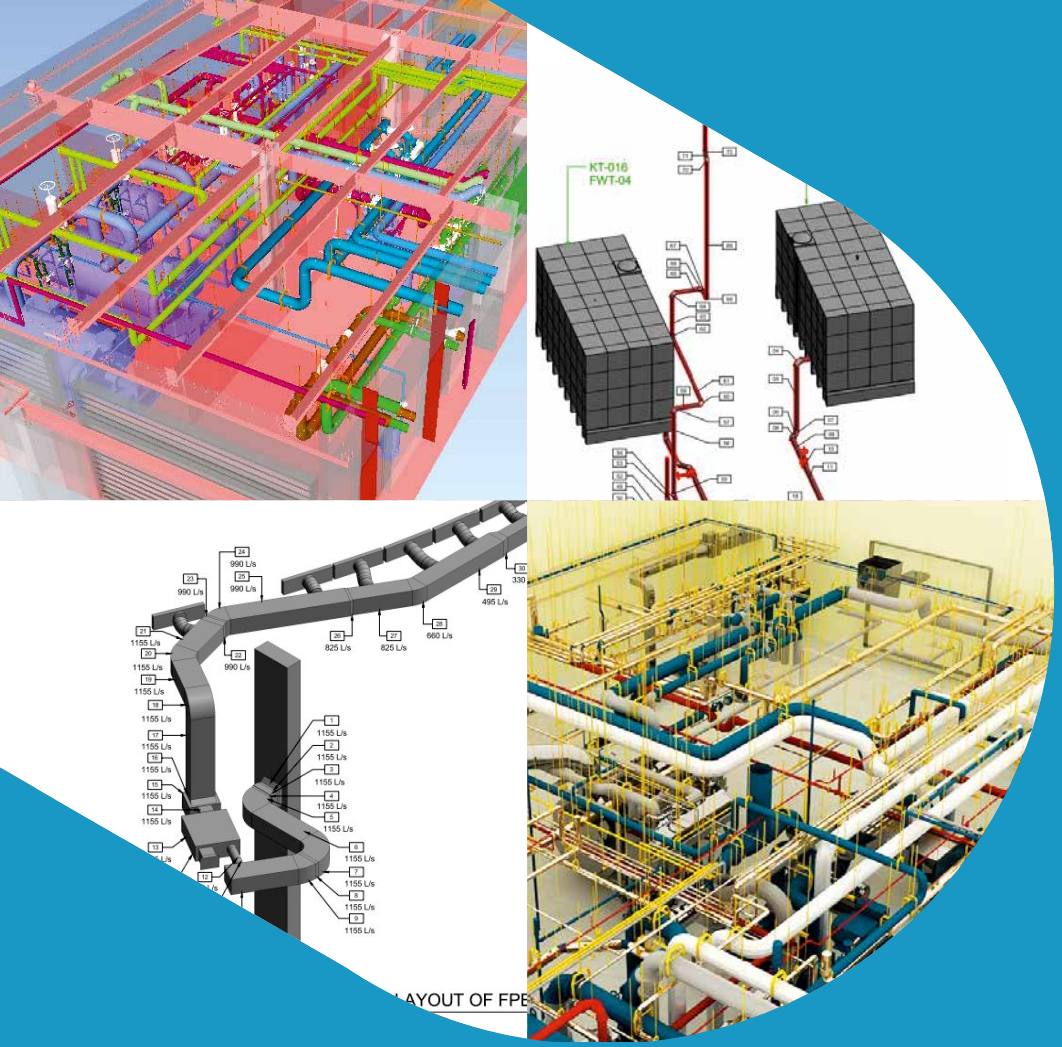

MEP Design Engineering

30+ years

pinnacleinfotech.com

Pinnacle Infotech

Construct Certainty, with Technology

Mission

Help the AEC industry optimize resources, cost and quality through innovative use of technology for:

- Sustainable and efficient design
- Collaborative pre-construction planning
- Agile construction process
- Reliable facility management

Vision

Lead the global AEC industry to certainty and efficiency using technology.

Associations:

Our Values

E **Excellence**
We take pride in our passion for excellence. It is a way of life for us.

A **Agility**
We are always at the edge of technology and driven by agile transformations.

R **Reliability**
We have ISO-certified processes and workflow to produce consistent and reliable performance.

T **Teamwork**
Pinnacle provides an environment where teams collaborate effectively to excel.

H **Honesty**
We win the trust of our stakeholders through integrity, straightforwardness, and transparency.

Index

1. Revolutionizing MEP Design Engineering

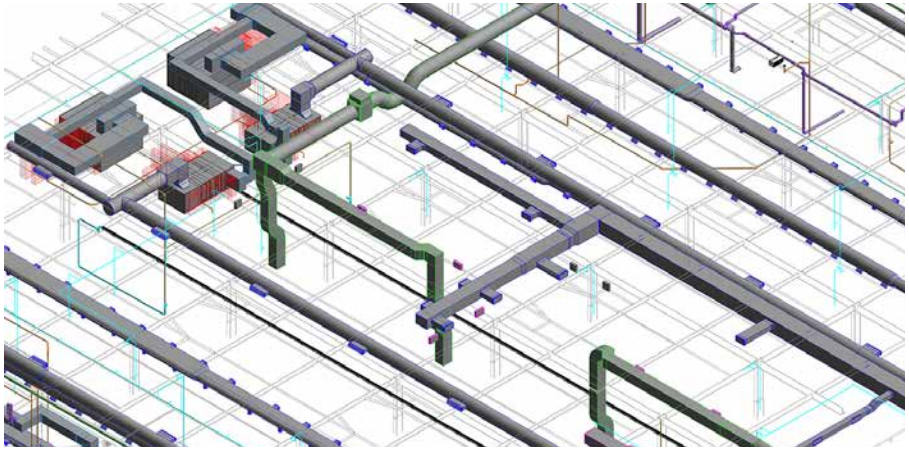

MEP Design Model

Proper planning and coordination are the keys to the successful execution of projects in the construction industry. Building Information Modeling (BIM) allows stakeholders to create and examine virtual representations of the Mechanical, Electrical and Plumbing (MEP) systems and other utilities. The simulated 3D construction can be used to show design intent to owners with greater visualization, generate coordinated construction documents (CD Sets) for eliminating rework & change order and eradicate work-stoppages due of RFIs in view of availability of high degree of detailing within the model itself.

Pinnacle Infotech has been acknowledged as the global leader in providing innovative BIM solutions. We have received several awards and recognitions for our expertise, from the government and from various trade associations, including excellence awards, innovation awards and top exporter and highest job creator awards. NASSCOM, the leading IT trade association, has acknowledged Pinnacle among the Top IT Innovators for 6 years, between 2007 and 2017. Our process orientation and quality control are per ISO standards – 9001:2015, 27001:2013, 19650-2, 19650-3, and 19650-5, plus EMS 14001:2015. As holders of **ISO 19650-5**, the esteemed international certification for BIM services, we ensure adept data management and transparent collaboration.

The successful completion of more than 15000 BIM projects in 43+ countries has provided Pinnacle with a deep understanding of international building codes and procedures. Recognize the importance of effective work process management and regular communication while delivering outsourced services, our global delivery system allows us to maintain constant contact with our clients, making geographical separation meaningless. We have developed an ideal mix of infrastructure, experience, global presence and commitment to excellence that has led to long-term relationship with more than 2000 clients worldwide.

2. Benefits of Implementing BIM for MEP Design Engineering Firms

Greater Visualization

Enables demonstration of design intent to owners and stakeholders with 3D visualization, for quicker & more efficient decision making during the design phase.

Flexibility in Design

Allows easy simulation of various design parameters through nominal input changes! Seamless coordination with Owners, Architects, Consultants and Stakeholders for a real time updated model during design phase.

Accuracy

Exact Engineering Drawings (Plans, Elevations & Sections etc.,) along with well-coordinated Construction Documents derived from the 3D model itself, thus improving quality and accuracy.

Efficiency

Eradicates work stoppages due to RFI's through availability of high degree of detailing within the model, and rework due to constructability issues since the supplied BIM Model is clash coordinated for all trades.

Savings

Cost optimization and value engineering by using BIM and interfacing with various design analysis and simulation software. Pre-fabrication and quantity take-off derived automatically from the 3D model.

Our clients have reported up to 15% cost savings by successfully implementing BIM

3. BIM Services for MEP Design Engineering Firms

Pinnacle works closely with MEP Design Engineering firms during the design development stages using an ISO 9001 certified process to provide accurate and cost effective solutions. We work with a range of inputs and specialize in BIM modeling to validate the design for constructability, applicable codes, performance and maintenance. 3D visualization helps bring clarity in design objectives pertaining to performance parameters, clearance, tolerance, support systems for installation and ease of maintenance.

Different design options are simulated and analyzed to choose the most efficient solution. Our team uses advanced design software like Pipenet, ETAP, HAP, Dialux & Elite, which integrate seamlessly with the BIM models. We are platform independent and work on all major software applications like AutoCAD MEP, Revit MEP, Autodesk Fabrication, Bentley and SolidWorks. We follow all international standards like ASHRAE, IMC, ANSI, ASME, IPC, UPC, NFPA & SMACNA along with local codes and standards as per project requirement / specifications.

The inputs received by Pinnacle include

- Hand-Sketches
- Red-Line markups
- Single-Line Diagrams
- Architectural Conceptual Drawings and Models
- Design Sheets
- Design Basis Reports

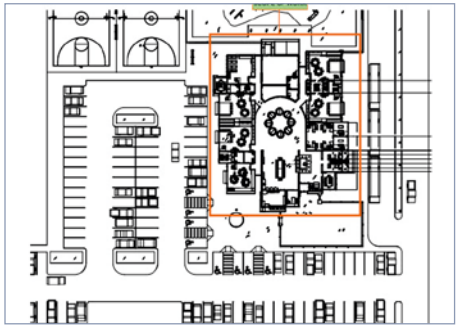

Architectural Input

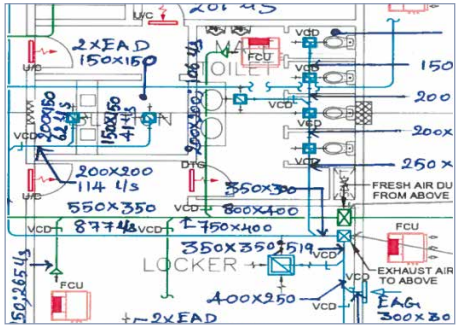

Hand Sketch

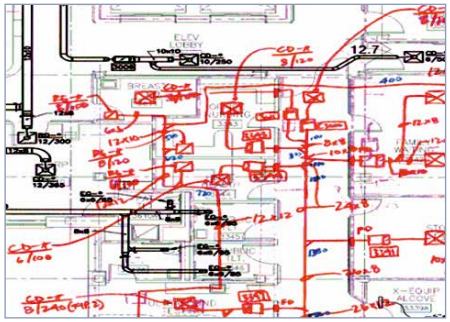

Red-Line Markup

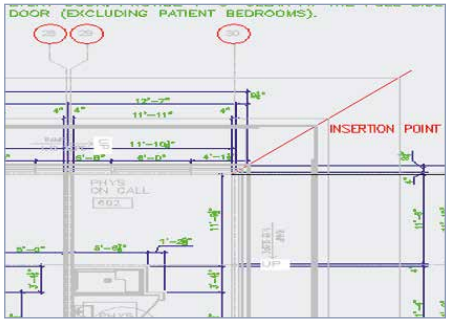

CAD Files

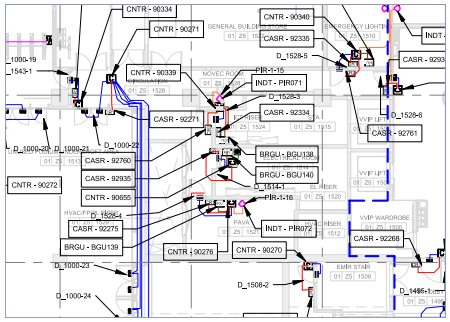

Electrical CAD Input

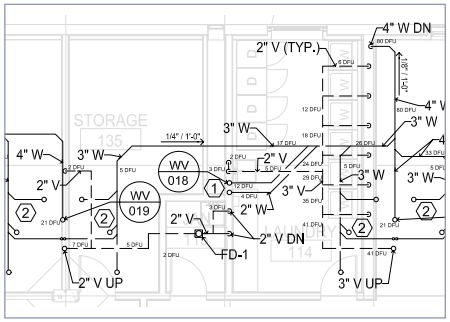

Plumbing Input

4. Mechanical Design Engineering

Mechanical Design Workflow

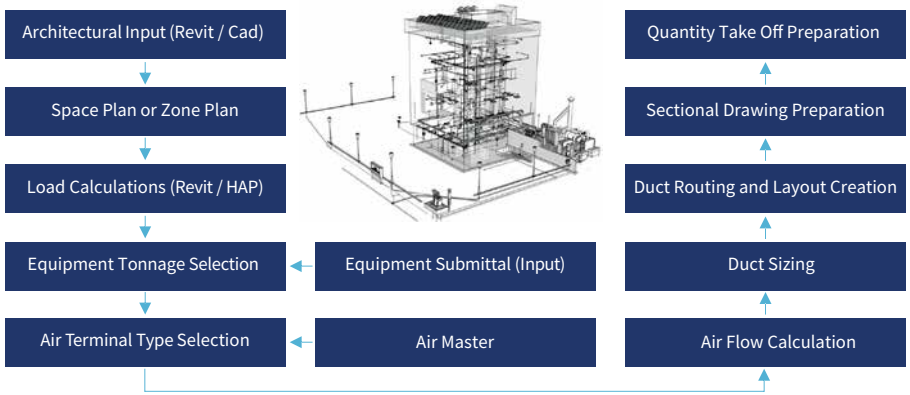

4.1 Load Calculations

- Heating Load Calculation
- Cooling Load Calculation

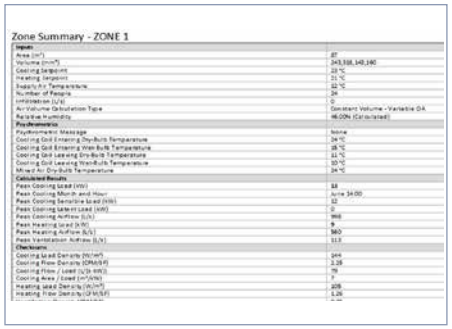

Load Calculation Using Revit

Load Calculation Using HAP

4.2 Mechanical Ducting

Equipment Selection

Equipment Selection based on Tonnage will be obtained from the Load Calculations.

Air Terminal Selection

Air Terminal Selection and flow rate for each Space/Zone is determined with the help of standard manuals like Air Master etc., after Load Calculation.

Duct Sizing, Routing & Layout Generation

Duct Sizing will be done with respect to the volumetric flow and line sketch/Hand sketch will be drawn for future reference. We size the duct based on the Airflow accordingly with the help of McQuay Duct sizer. Routing and Layout creation will be after placing air terminal and sizing duct.

Riser / Schematic Drawings

Detail, Section & Isometric Drawings

External Static Pressure Calculation

- Input required - Architecture & Mechanical Modelling
- Tools Used - Elite & Revit

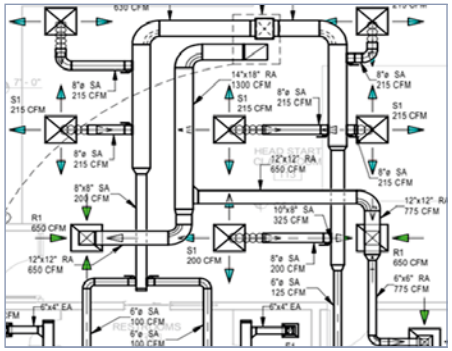

Duct Sizing

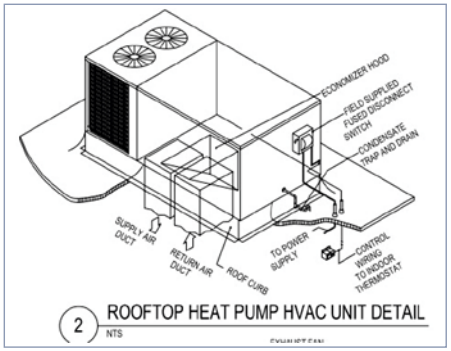

Detail Drawing

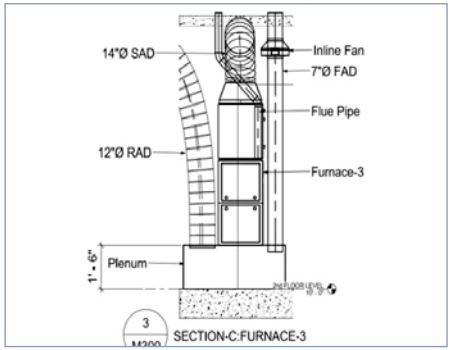

Section Drawing

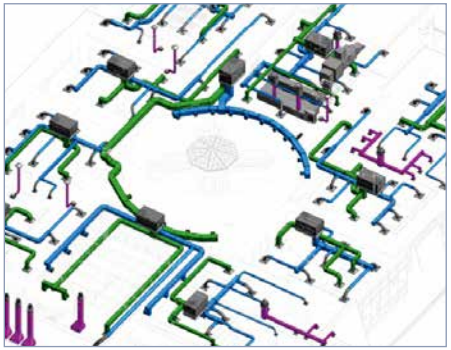

Isometric Drawing

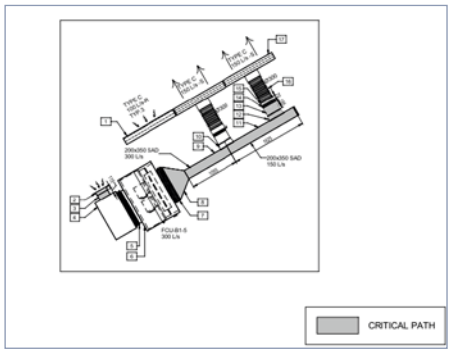

ESP Calculation

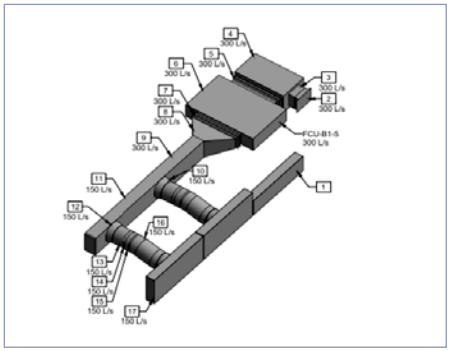

Isometric Layout

4.3 Mechanical Piping

- Pump Head Calculation
- Pipe Sizing and Layout Generation
- Riser / Schematic Drawing Detail
- Section & Isometric Drawings

4.4 Quantity Take-Off

Part Material	Product Description	Size	Count
Pipe Systems: Victaulic (OEM) Imperial	VIC STYLE 807N QUICKVIC RIGID P GSKT	4"	8
Pipe Systems: PVC	No2100 - Coupling (S)	6"	7
Pipe Systems: PVC	No2300 - Elbow 90 (S)	4"	1
Pipe Systems: PVC	No2300 - Elbow 90 (S)	6"	2
Pipe Systems: PVC	No2309 - Elbow 45 (S)	4"	1
Pipe Systems: PVC	No2309 - Elbow 45 (S)	6"	3
Pipe Systems: PVC	PVC 45	2"	11
Pipe Systems: PVC	PVC 45	3"	9
Pipe Systems: PVC	PVC 45	4"	7
Pipe Systems: PVC	PVC bell reducer	3"-2"	1
Pipe Systems: PVC	PVC bell reducer	4"-3"	1
Pipe Systems: PVC	PVC bushing	3"-2"	7

Quantity Take-off

5. Electrical Design Engineering

5.1 Load Calculations

- Load and Short Circuit Analysis
- Fault Current Calculation
- Illumination Calculation

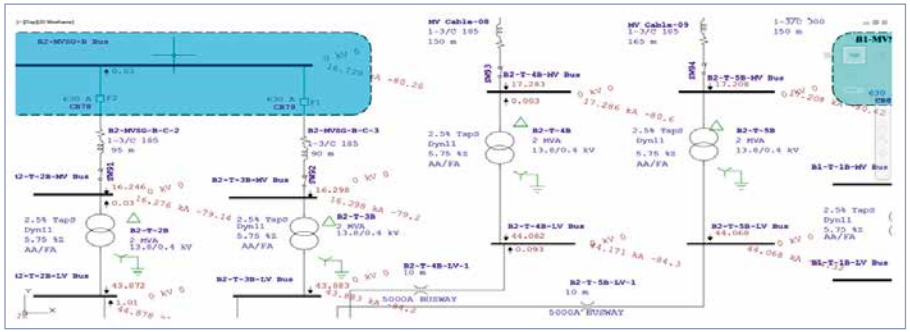

Load and Short Circuit Analysis

5.2 Sizing & Routing

- Cable Sizing
- Conduit Sizing
- Conduit Routing
- Cable Tray Sizing
- Containment & Cable Tray Routing

Route Type	Level & Zone	Passing Through	CALCULATED FROM	TRIAX CABLE	SMPTE CABLE	8-ch AUDIO MULTICORE	12-ch AUDIO MULTICORE	16-ch AUDIO MULTICORE	24C SMFO	RISER LOCATION
MAIN TRAY	L0.Z5	5.13	L0.Z5.BCP.03	2	2	1			1	TO RISER 1
BRANCH TRAY	L0.Z5	5.14	L0.Z5.BCP.01	2	2	1			1	TO RISER 1
BRANCH TRAY	L0.Z5	5.15	L0.Z5.BCP.06	4	4			1	1	TO RISER 1
BRANCH TRAY	L0.Z5	5.16	5.14+5.15	6	6	1		1	2	TO RISER 1
MAIN TRAY	L0.Z5	5.17	5.13+5.16	8	8	2		1	3	TO RISER 1
BRANCH TRAY	L0.Z5	5.18	L0.Z5.BCP.14	2	2	1			1	TO RISER 1
MAIN TRAY	L0.Z6	5.19	5.17+5.18	10	10	3		1	4	TO RISER 1
BRANCH TRAY	L0.Z5	5.2	L0.Z5.BCP.05	4	4			1	1	TO RISER 1
MAIN TRAY	L0.Z5	5.21	5.19+5.20	14	14	3		2	5	TO RISER 1
BRANCH TRAY	L0.Z5	5.22	L0.Z5.BCP.12	3	3		1		1	TO RISER 1
MAIN TRAY	L0.Z5	5.23	5.21+5.22	17	17	3	1	2	6	TO RISER 1
BRANCH TRAY	L0.Z5	5.24	L0.Z5.BCP.04	2	2	1			1	TO RISER 1
BRANCH TRAY	L0.Z5	5.25	L0.Z5.BCP.10	3	3		1		1	TO RISER 1
BRANCH TRAY	L0.Z5	5.26	5.24+5.25	5	5	1	1		2	TO RISER 1
MAIN TRAY	L0.Z5	5.27	5.23+5.26	22	22	4	2	2	8	TO RISER 1
BRANCH TRAY	L0.Z5	5.28	L0.Z5.BCP.13	2	2	1			1	TO RISER 1
MAIN TRAY	L0.Z5	5.29	5.27+5.28	24	24	5	2	2	9	TO RISER 1
BRANCH TRAY	L0.Z5	5.3	L0.Z5.BCP.09	3	3		1		1	TO RISER 1
BRANCH TRAY	L0.Z5	5.31	L0.Z5.BCP.11	3	3		1		1	TO RISER 1
BRANCH TRAY	L0.Z5	5.32	5.30+5.31	6	6		2		2	TO RISER 1
MAIN TRAY	L0.Z5	5.33	5.29+5.32	30	30	5	4	2	11	TO RISER 1

Cable Size & Cable Tray Calculation

5.3 Schedules

- Panel Schedule
- Fixture Schedule

PANEL: MB-A

VOLTAGE: 120/208 Wye | PH: 3 | WIRE: 4 | ENCLOSURE: NEMA 3R
BUSSING: 1000 A CU | BUILDING: EXTERIOR | MOUNTING: SURFACE MOUNTED
MAINS: 1000 A MCB
INCOMING: TOP | FROM: MDP-A

DESCRIPTION	POLE	CONDUIT	WIRE	GND	TRIP	CKT	LOAD PER PHASE A		LOAD PER PHASE B		LOAD PER PHASE C		CKT	TRIP	GND	WIRE	CONDUIT	POLE	DESCRIPTION
LC-1AL	3	2	3/0	6	200	1	15602 VA	5083 VA					2	200	6	3/0	2	3	LC-2AL
--	–	–	–	–	--	3			15611 VA	5090 VA			4	–	–	--	--	--	--
--	–	–	–	–	--	5					15671 VA	5204 VA	6	–	–	--	--	--	--
LC-3AL	3	2	3/0	6	200	7	5083 VA	5083 VA					8	200	6	3/0	2	3	LC-4AL
--	–	–	–	–	--	9			5090 VA	5090 VA			10	–	–	--	--	--	--
--	–	–	–	–	--	11					5204 VA	5204 VA	12	–	–	--	--	--	--
LC-5AL	3	2	3/0	6	200	13	5083 VA	5083 VA					14	200	6	3/0	2	3	LC-6AL
--	–	–	–	–	--	15			5090 VA	5090 VA			16	–	–	--	--	--	--
--	–	–	–	–	--	17					5204 VA	5204 VA	18	–	–	--	--	--	--
LC-7AL	3	2	3/0	6	200	19	5173 VA	17170 VA					20	200	6	3/0	2	3	LC-2AU
--	–	–	–	–	--	21			5000 VA	17119 VA			22	–	–	--	--	--	--
--	–	–	–	–	--	23					5194 VA	16952 VA	24	–	–	--	--	--	--
LC-3AU	3	2	3/0	6	200	25	17170 VA	17170 VA					26	200	6	3/0	2	3	LC-4AU
--	–	–	–	–	--	27			17119 VA	17119 VA			28	–	–	--	--	--	--
--	–	–	–	–	--	29					16952 VA	16952 VA	30	–	–	--	--	--	--
LC-5AU	3	2	3/0	6	200	31	17170 VA	17170 VA					32	200	6	3/0	2	3	LC-6AU
--	–	–	–	–	--	33			17119 VA	17119 VA			34	–	–	--	--	--	--
--	–	–	–	–	--	35					16952 VA	16952 VA	36	–	–	--	--	--	--
LC-7AU	3	2	3/0	6	200	37	21243 VA						38						
--	–	–	–	–	--	39			21290 VA				40						
--	–	–	–	–	--	41					20816 VA		42						
TOTAL PANEL LOAD (KVA/Ø):							153,3		152,9		152,5								
									458,7										

	CONN LOAD	DEM FACT	DEM LOAD
COMMERCIAL LOAD	139,1 kVA	1,00	139,1 kVA
DWELLING LOAD	319,6 kVA	0,44	140,6 kVA
TOTAL LOAD	458,7 kVA		279,7 kVA
DEMAND AMPS			776,5 A

Panel Schedule

ELECTRICAL FIXTURE SCHEDULE A

LEVEL	TYPE	NUMBER OF POLES	VOLTAGE	QUANTITY
LEVEL 1	JUNCTION BOX	1	120V	32
LEVEL 1	JUNCTION BOX	2	208V	18
LEVEL 1	RECEPTACLE	1	120V	134
LEVEL 2	JUNCTION BOX	1	120V	7
LEVEL 2	JUNCTION BOX	2	208V	7
LEVEL 2	RECEPTACLE	1	120V	201
LEVEL 2	RECEPTACLE 2 POLE	2	208V	12
LEVEL 2	RECEPTACLE FLOOR MOUNTED	1	120V	6
LOFT	JUNCTION BOX	2	208V	6
LOFT	RECEPTACLE	1	120V	48

Fixture Schedule

5.4 Drawings

- One Line Drawing
- Circuit Connections Drawings (Lighting & Power)
- Riser/ Schematic Drawings
- Detail, Section & Isometric Drawings

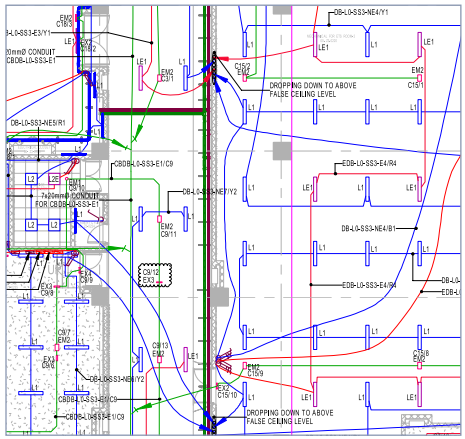

Lighting Circuit Connection Drawings

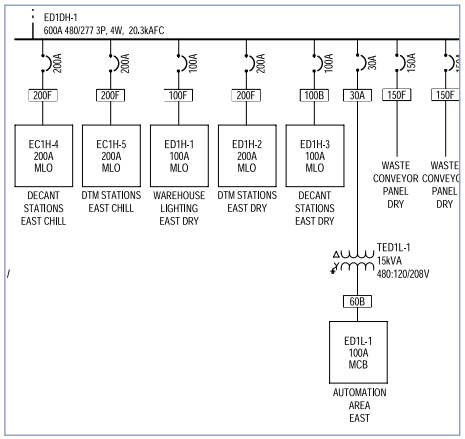

One Line Drawing

5.5 Fire Alarm System

- Zone Layout
- Panel Schedule (MAP, SAP & Repeater Panel)
- Layout Generation
- Schematic Drawing

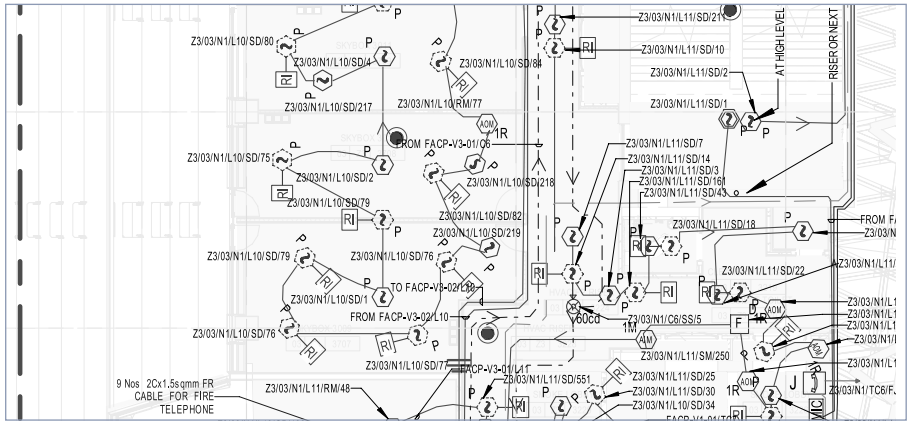

Fire Alarm System

5.6 Quantity Take-Off

During the design phase 3D model provides detailed material quantities of all items and enables accurate cost estimate to ascertain if the design meets the project budget. We produce accurate and timely estimate throughout a project for controlling costs. Using our BIM software tools, we help the designers to explore various design alternatives and make decisions to reduce cost and take energy saving options and project life cycle cost.

LEGENDS:

SYMBOL	DESCRIPTION	MODEL NO.
	VARIABLE FREQUENCY DRIVE	
IUC	INTELLIGENT UNITARY CONTROLLER	For FCU : Alerton BACtalk VLC-444e For VAV : Alerton BACtalk VAVH-5D
ACM	DDC PANEL WITH ACM CONTROLLER	
	MOTOR CONTROL PANEL	
	DIRECT DIGITAL CONTROLLER	EAE/Tekpan
T	THERMOSTAT (T)	For FCU/VAV : MS-2000-BT
	EMERGENCY SUB MAIN DISTRIBUTION BOARD(ESMDB)	
	SUB MAIN DISTRIBUTION BOARD(SMDB)	
	MODBUS COMMUNICATION	1PR-22AWG-B3-C-1310
	BACNET MSTP (IUC TO IUC CONNECTION)	1PR-22AWG-B3-C-1310
	BACNET MSTP (DDC TO DDC CONNECTION)	1PR-22AWG-B3-C-1310
	INDEX MOTORISED VALVE	
	THERMOSTAT CONNECTION / (IUC TO MCP & DDC TO MCP CONNECTION)	B3-C-1310/1PR-22AWG-SHIELDED CABLE

Lighting & Power

POWER SYSTEM (NON-ESSENTIAL POWER SUPPLY)		MOUNTING HEIGHT
	13A 3PIN NORMAL SINGLE SWITCHED POWER SOCKET	@ 450 MM BOTTOM FROM FFL
	13A 3PIN NORMAL SINGLE SWITCHED POWER SOCKET (WEATHER PROOF)	@ 450 MM BOTTOM FROM FFL
	13A 3PIN NORMAL SWITCHED TWIN POWER SOCKET	@ 450 MM BOTTOM FROM FFL
	13A 3PIN NORMAL SWITCHED TWIN POWER SOCKET	@ AS INDICATED IN PLAN
	13A 3PIN NORMAL SWITCHED TWIN POWER SOCKET (WEATHER PROOF)	@ 450 MM BOTTOM FROM FFL
	POWER OUTLET FOR HAND DRYER	@ HIGH LEVEL
	16A, 1PH, 3PIN INDUSTRIAL TYPE SOCKET OUTLET	@ 450 MM BOTTOM FROM FFL
	13A 3PIN SWITCHED SPUR UNIT (HAIR DRYER)	@ 1250 MM BOTTOM FROM FFL
	16A, 1PH, 3PIN INDUSTRIAL TYPE SOCKET OUTLET (WEATHER PROOF)	@ 450/1250 MM BOTTOM FROM FFL AS INDICATED IN THE LAYOUT
	20A DOUBLE POLE SWITCH	@ 1250 MM BOTTOM FROM FFL
	20A FLEX OUTLET	@ 3300 MM BOTTOM FROM FFL/NEAR MECH EQUIP
	13A 3PIN NORMAL SINGLE SWITCHED POWER SOCKET HIGH FLOOD LIGHT (IMP)	--

POWER SYSTEM CONDUIT AND DB's		MOUNTING HEIGHT
	20 MM Ø NON-ESSENTIAL CONDUIT IN FLOOR SCREED/ SLAB	--
	20 MM Ø ESSENTIAL CONDUIT IN FLOOR SCREED/ SLAB	--
	20 MM Ø CONDUIT FOR UPS POWER IN FLOOR SCREED/ SLAB	--
	20 MM Ø NON-ESSENTIAL CONDUIT IN CEILING SLAB	--
	20 MM Ø ESSENTIAL CONDUIT IN CEILING SLAB	--
	20 MM Ø CONDUIT FOR UPS POWER IN CEILING SLAB	--
	NORMAL DISTRIBUTION BOARD	@ 2000 MM TOP FROM FFL
	EMERGENCY DISTRIBUTION BOARD	@ 2000 MM TOP FROM FFL
	UPS DISTRIBUTION BOARD	@ 2000 MM TOP FROM FFL

POWER SYSTEM (ESSENTIAL POWER SUPPLY)		MOUNTING HEIGHT
	13A 3PIN EMERGENCY SINGLE SWITCHED POWER SOCKET	@ 450 MM BOTTOM FROM FFL
	13A 3PIN EMERGENCY SWITCHED TWIN POWER SOCKET	@ 450 MM BOTTOM FROM FFL
	13A 3PIN EMERGENCY SWITCHED SPUR UNIT (HIGH LEVEL)	--
	16A, 1PH, 3PIN INDUSTRIAL TYPE SOCKET OUTLET	@ 450/1250 MM BOTTOM FROM FFL AS INDICATED IN THE LAYOUT
	16A, 1PH, 3PIN INDUSTRIAL TYPE SOCKET OUTLET(WEATHER PROOF)	@ 450/1250 MM BOTTOM FROM FFL AS INDICATED IN THE LAYOUT
	16A, 3PH, 5PIN INDUSTRIAL TYPE SOCKET OUTLET	@ 450/1250 MM BOTTOM FROM FFL AS INDICATED IN THE LAYOUT
	16A, 1PH, 3PIN SWITCHED SOCKET OUTLET (WP)	@ 450/1250 MM BOTTOM FROM FFL AS INDICATED IN THE LAYOUT
	MCP PANEL	--
	13A 3PIN EMERGENCY UN-SWITCHED SPUR UNIT FOR BCP(WP)	--
	13A 3PIN EMERGENCY UN-SWITCHED SPUR UNIT FOR ACCESS CONTROL/DELUGE PANEL	--
	13A 3PIN NORMAL SWITCHED TWIN POWER SOCKET	@ AS INDICATED IN PLAN

Switch & Power Outlets

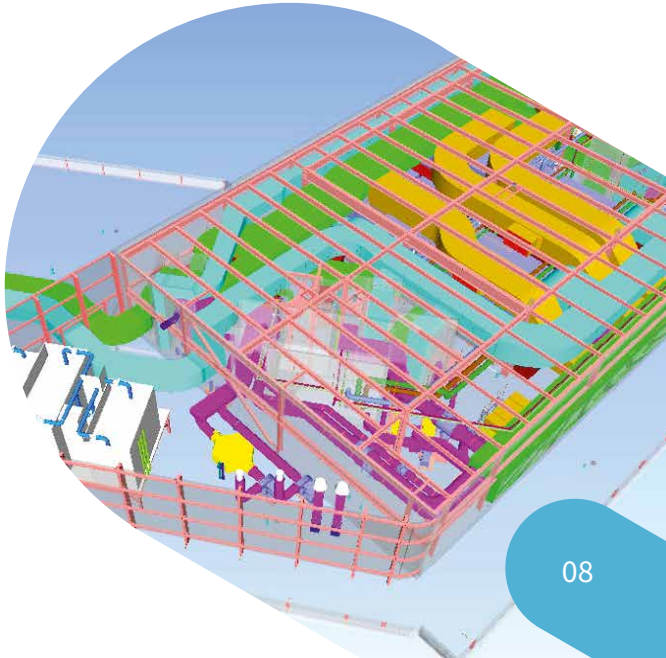

6. Plumbing Design Engineering

6.1 Pump Head Calculation

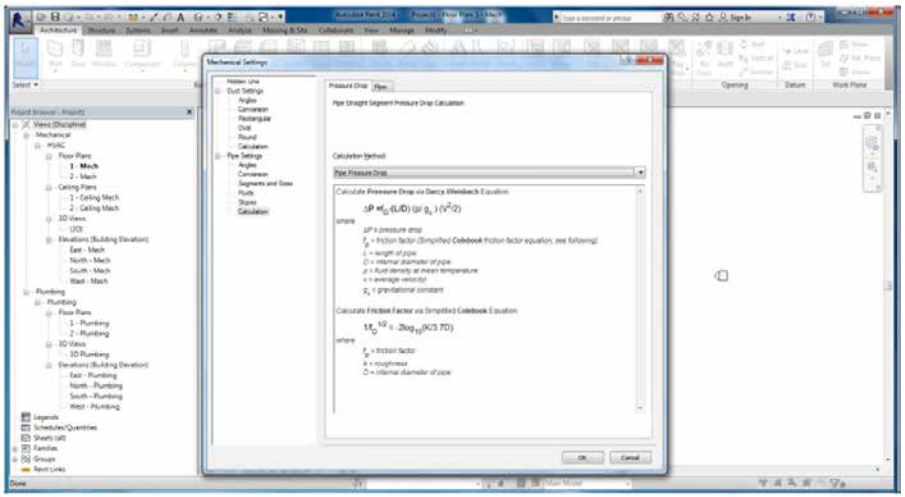

Pressure Drop Calculations

Section No	DescriptionPipe / Fitting	Pipe diameter (mm)	Flow rate (l/s)	Length (m)	Equivalent lengthfor fitting(m)	Friction loss (Pa/m) (Extracted from table)	Total friction loss (FL x L/EL)(Pa)
01	Pipe	50	20.5	4	-----	70	280
	Fitting(Strainght 90 deg Elbow)	50	20.5	-----	3.3	70	212.8

Pump Head Calculations

6.2 Pipe Sizing and Layout Generation

- Water Supply
- Waste & Vent
- Medical Gas
- Natural Gas

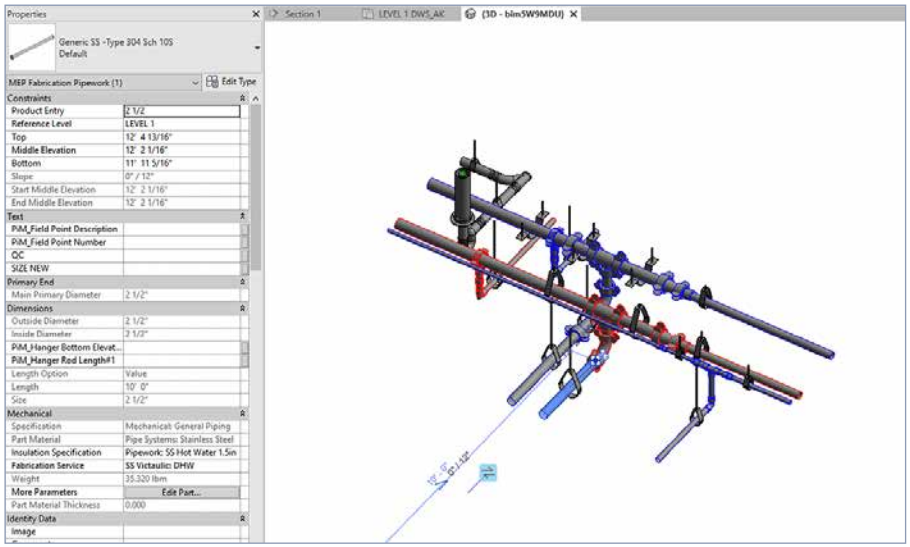

Automatic Flow Calculation Based on Fixture Unit Values

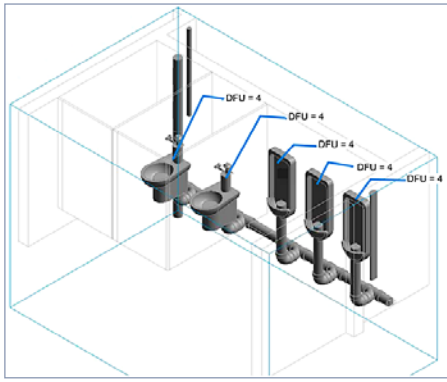

TABLE 710.1(2)
HORIZONTAL FIXTURE BRANCHES AND STACKS[a]

DIAMETER OF PIPE (inches)	MAXIMUM NUMBER OF DRAINAGE FIXTURE UNITS (dfu)			
		Stacks[b]		
	Total for horizontal branch	Total discharge into one branch interval	Total for stack of three branch intervals or less	Total for stack greater than three branch intervals
$1^1/_2$	3	2	4	8
2	6	6	10	24
$2^1/_2$	12	9	20	42
3	20	20	48	72
4	160	90	240	500
5	360	200	540	1,100
6	620	350	960	1,900
8	1,400	600	2,200	3,600
10	2,500	1,000	3,800	5,600
12	3,900	1,500	6,000	8,400
15	7,000	Note c	Note c	Note c

Assign Required Flow to Plumbing Fixtures Pipe Sizes Selected as per System Requirements using IPC

6.3 Riser / Schematic Drawing

6.4 Detail, Section & Isometric Drawings

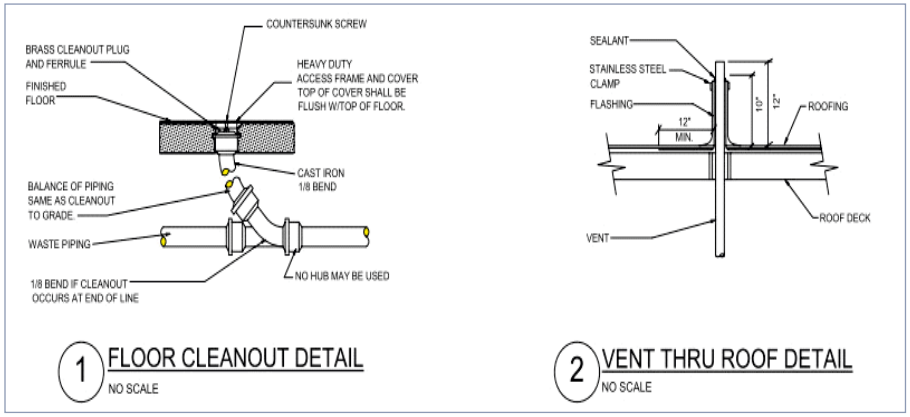

Section & Detail Drawing

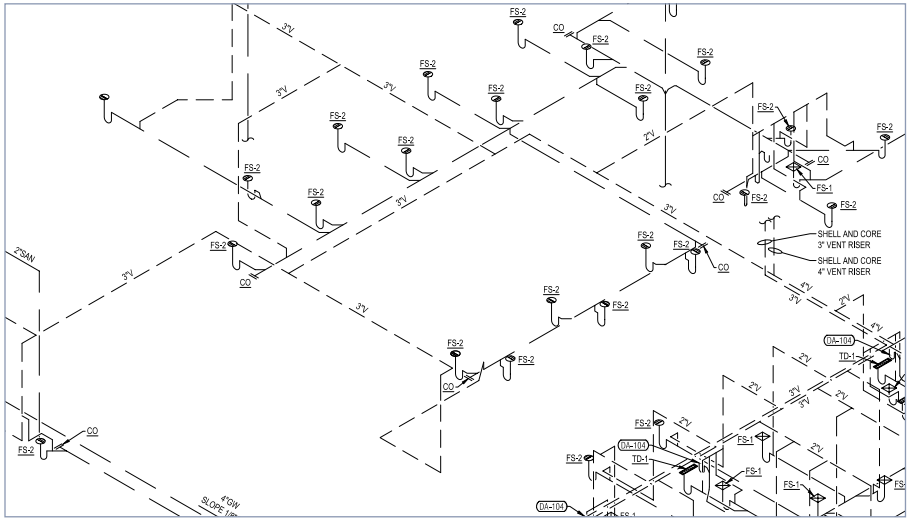

Isometric Drawing

6.5 Quantity Take Off

WHP: Hotel L-3 Pipe Bill of Material				
Size	Pipe	Material	Length (inch)	Length (ft)
1-1/2''	No-Hub Pipe	Cast Iron	44.664	3.722
2"	No-Hub Pipe	Cast Iron	2963.668	246.9723333
3"	No-Hub Pipe	Cast Iron	1600	133.3333333
4"	No-Hub Pipe	Cast Iron	1819.556	151.6296667
6"	No-Hub Pipe	Cast Iron	213.657	17.80475
8"	No-Hub Pipe	Cast Iron	231.91	19.32583333
10"	No-Hub Pipe	Cast Iron	232.063	19.33858333
1"	Type L-HL-20ft	Copper	3553.248	296.104
3/4"	Type L-HL-20ft	Copper	119.6	9.966666667
1-1/2''	Type L-HL-20ft	Copper	115.988	9.665666667
1-1/4''	Type L-HL-20ft	Copper	3166.772	263.8976667
2"	Pipe-B88-CU-L(PE)	Copper	116.027	9.668916667
2-1/2''	SCH-40S-PIPE	Stainless Steel	116	9.666666667
3"	SCH-40S-PIPE	Stainless Steel	116	9.666666667
4"	CPVC Pipe	CPVC	116.004	9.667

Quantity Take-Off for Pipes

7. 3D Modeling

The detailed design can be converted into 3D, corresponding roughly with the LOD 300 Revit model. Analysis based on specific systems along with Constructability Review, Clash Coordination and Design Optimization can be performed, and the model is leveraged for the generation of traditional Construction Documents and BoQ.

7.1 Constructability Reviews

Virtual Construction of project in BIM enables Independent Review of the Construction Plans and Specifications. This identifies discrepancies in drawings and all constructability issues at the design stage. During the constructability review, our BIM team generates a series of RFI's to identify the following type of constructability and operational issues:

- Missing information/documents
- Input inconsistencies
- Conflicting data
- Operation clearance and accessibility issues
- Feasibility of support systems
- No Fly-zones

BIM model is updated based on RFI response. Status of all RFIs is maintained in a log and follow-up is done to resolve them. This ensures delivery of quality construction documentation.

7.2 Clash Coordination & Optimization

Our coordinated BIM models allow our clients to check possible interference among all building systems. They help design firms to visualize the entire building system before the beginning of construction, leading to better project planning. This eliminates rework during the construction phase, saving time and money. We resolve clashes among all trades including architectural, structural, mechanical, electrical, plumbing, fire protection, concrete and several other trades by sharing 3D clash Navis viewpoints or through WebEx meetings.
We re-route utilities, change elevation and re-size elements for resolving clashes. Moreover, we provide Value Engineering for improving system efficiency, reducing costs and easier maintenance of construction. Coordinated moels are used for making quantity takeoffs, estimation and location scheduling.

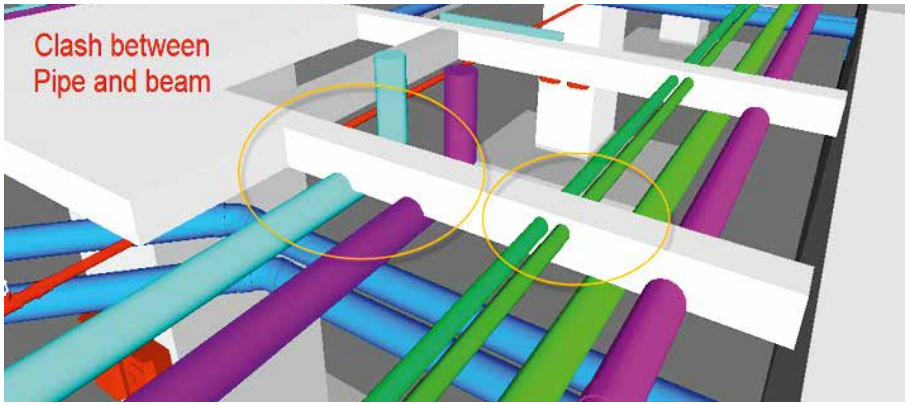

Before Coordination

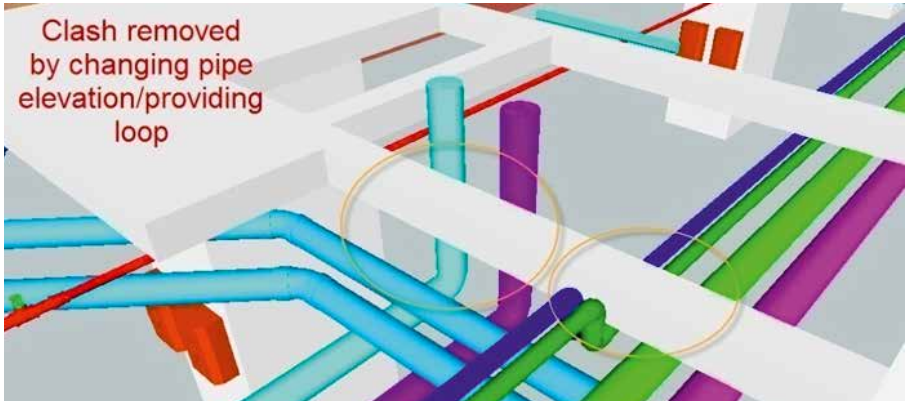

After Coordination

7.3 Construction Documents (CD Sets)

Construction documents are generated from the detailed BIM coordinated models. Our BIM Models represent the most comprehensive drawings, depicting each component with technical information.

- All construction documents are cohesive and consistent in spite of changes.
- Any change in the DD (Design Document) drawings, updates the model.
- Sections are generated seamlessly for any critical arrangement.

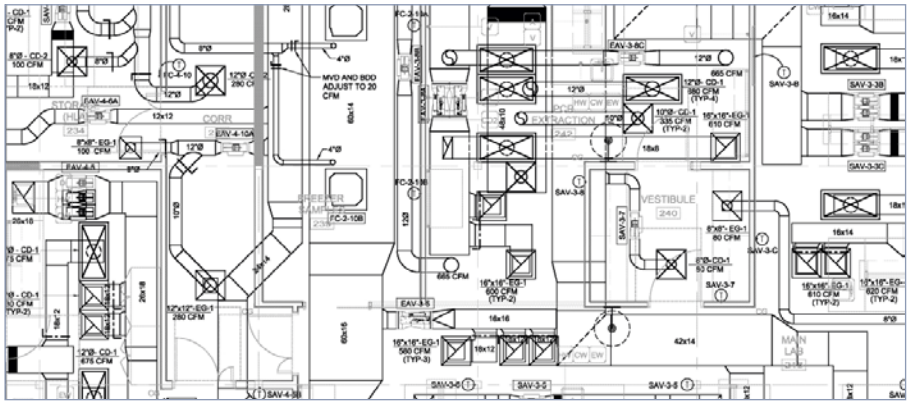

Mechanical plan

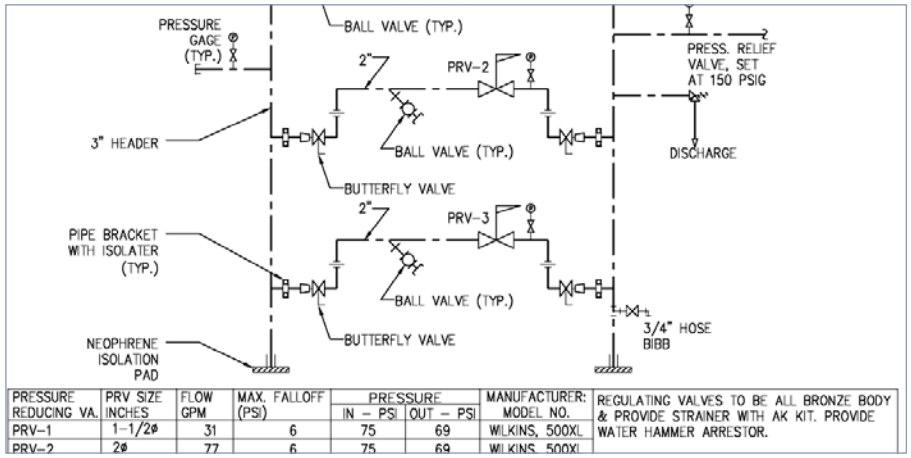

PRESSURE REDUCING VA.	PRV SIZE INCHES	FLOW GPM	MAX. FALLOFF (PSI)	PRESSURE IN – PSI	PRESSURE OUT – PSI	MANUFACTURER: MODEL NO.	REGULATING VALVES TO BE ALL BRONZE BODY & PROVIDE STRAINER WITH AK KIT. PROVIDE WATER HAMMER ARRESTOR.
PRV-1	1-1/2ø	31	6	75	69	WILKINS, 500XL	
PRV-2	2ø	77	6	75	69	WILKINS, 500XL	

Pressure reducing valve station detail

8. Why Pinnacle

Each of our employees has ingrained in themselves the core values - 'EARTH' of our organization.

Excellence | Agility | Reliability | Teamwork | Honesty

Excellence

Excellence is a way of life for us. Our commitment to hard work, creativity, and innovation allows us to reach our full potential in approach, operations, and collaborations. We foster a culture of excellence from the ground up within our organization to achieve operation at the highest industry standards.

Agility

We understand that every business is different. We are highly agile and can adjust quickly to changing market conditions and client requirements. In addition, we offer a variety of business models to suit your specific needs at competitive prices.

Reliability

Pinnacalites rely on trusted processes to consistently produce excellent results. We have over 30 years of experience in the AEC industry, and our work processes are ISO-certified.

Teamwork

We work together to scale every challenge. We understand that it is only through teamwork that we can provide the best possible results for our customers. Pinnacle fosters a team-oriented culture where everyone is valued, and their contributions are encouraged and recognized.

Honesty

Honesty is our key value, and we hold ourselves to the highest standards of integrity. We strive to be transparent and clear in our communication to ensure that our clients get the best value for the money.

9. Our Team

Pinnacle's significant contribution to Building Information Modeling is made possible by its highly qualified and experienced workforce, including engineers, architects, and other experienced professionals. All our employees are well-versed in handling international construction codes and standards. We are proud of the diverse team and their global experience.

Employee Background

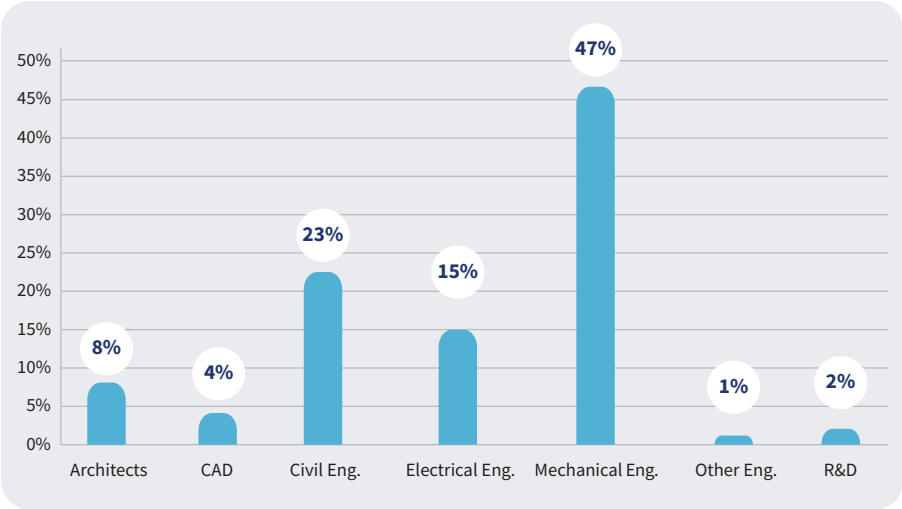

Workforce Growth

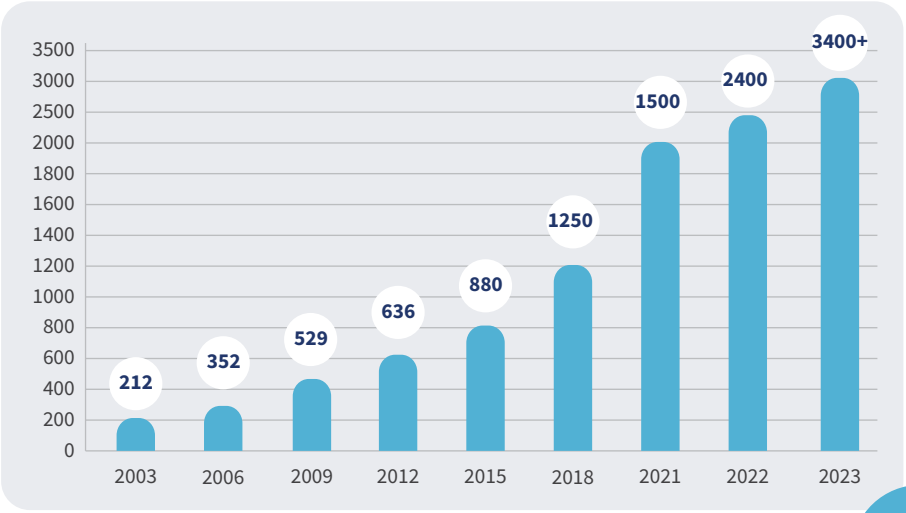

10. Our Infrastructure

Pinnacle has large state-of-art campuses in Durgapur, Jaipur, Kolkata & Madurai, comprising facilities like High-speed Bandwidth, Blade servers, an R&D center, a Datacenter, recreational zones, playgrounds, and more.

We also have equipped global delivery centers in the US (Houston and Atlanta), Canada (Toronto), UK (London), UAE (Dubai), Singapore, Germany (Munich), and Japan (Tokyo) that allow our employees to work in the same time zone as our customers.

Pinnacle's *Construct-ability Installation Lab* gives construction site experience to employees, integrating theoretical learning with practical experience. It enables our employees to deliver BIM solutions on time and with accuracy.

11. Our Work Processes

We strongly emphasize the significance of efficient work process management and consistent communication in the context of outsourcing services. Our process orientation and quality control are per ISO standards – 9001:2015, 27001:2013, 19650-2, 19650-3, and 19650-5, plus EMS 14001:2015. As holders of **ISO 19650-5**, the esteemed international certification for BIM services, we ensure adept data management and transparent collaboration. On orders, we assign a dedicated Relationship Manager, a competent Project Delivery Head, and Project Managers for focused execution.

Relationship Management

Our relationship managers are co-located with customers, ensuring clear communication, managing timelines, and handling deliveries promptly to surpass customer expectations. They advise customers on the services Pinnacle provides and build long-term business relationships.

Production Process

Project teams report to Project Delivery Head (PDH). The PDH provides technical leadership to the team and ensures standard work processes (as per ISO norms) are followed. They oversee project delivery. Project Delivery Heads periodically communicate with the client to get regular feedback and ensure the successful completion of the project.

Project Managers handle small teams for a customer and are responsible for understanding project requirements, project standards, invoicing processes, and communication protocols. They prepare project templates per project specifications, plan resources and align project delivery schedules.

Auditing Process

The COE team is an independent body in the company for Process and quality management and monitors the process and quality through various audit parameters, sets up feedback management processes, carries out investigations in case of any complaints/concerns, and provides action items. This way, Pinnacle ensures consistency in the final deliverables throughout the company.

Quality Control Process

Pinnacle's efficient processes and stringent quality control mechanisms have added certainty to 15000+ projects worldwide. Our process orientation and quality control are per ISO 9001:2015, ISO/IEC 27001:2013, ISO 19650-2, ISO 19650-3, and **ISO 19650-5** standards and are managed by an independent QC team.

12. Our Projects

Buffalo Bayou Autry Park

Houston, USA

The Domino's Village

Tennessee, USA

Spanish Peaks SKI Duplexes

Montana, USA

N Clybourn

Chicago, USA

Rochester Ville Phase 1

Ottawa, Canda

Six88 Golden Gate Point

Chicago, USA

13. Clients Speak

"This project went very well; we plan to expand our usage of the Pinnacle team on future projects."

OBERNEL Engineering, USA

"We really need Pinnacle to be an extension of our office. We need you to retain the training we have provided and apply it to every project."

MEP Delta Design, LLC, USA

"Pinnacle team is diligent, hard-working, and very responsive to requests or concerns of this large and challenging project. I enjoy working with them, and their considerable assistance in this project is evident."

Swanson Rink, USA

"We are thrilled to have found a group like yours that service all our MEP drafting needs, and at record response. We truly feel like you have met and exceeded everything we could have asked of your group. We look forward to a long and bright future together."

MCC Group, USA

"I was given exactly what I asked for. Everyone was very helpful and responsive. Thanks to everyone who worked on this for us. We were in a short turn around schedule and did not have the manpower to respond. I believe Pinnacle is a great resource for supplementing our force. Construction is unpredictable and keeping ample coordination manpower for all situations is difficult. Thanks again."

TD Industries, USA

"The team has been in front of the rest of the team for building for coordination of changes and detailing. Great Job."

Haltom Engineering, USA

"The Team was a tremendous help in setting up and generating drawings for multiple sites included in this renovation project package. Responsiveness to markups submitted and associated queries or requests for discussion of unclear tasks is incredibly helpful."

Envision Mechanical Engineers, Inc., USA

"This was our first experience with Pinnacle, and we at Waldrop were satisfied with the level of performance by the Pinnacle team. We were under extreme pressure to deliver under a tight deadline and your team aided us in doing so. We appreciate your work and look forward to other successful projects together."

Waldrop Mechanical Services, USA

"We have been extremely happy with Pinnacle's work to date on the PHMC. You have done a great job coming up with solutions to conflicts and your response time to our requests has been top notch. Thank you!"

Schmolck Mechanical Contractors, Inc., USA

"Communication between different time zones has its challenges. One must be completely clear about what they want and offer. Considering the 11:30 hr difference I am very pleased with the results. The correspondence I received was cordial and concise. The product I received was prompt and well developed."

U.S. Engineering Company, USA

"I am pretty happy with the product received from Pinnacle. We have been using Pinnacle's services for quite a while now and working with them closely to get good outputs. The Bethesda Butler project had a pretty easy plan and spec job so it went smoothly."

Grote Enterprises LLC, USA

"Pinnacle did a very good job meeting the fast paced schedule and requirements of the Kenwood IRC BIM project. They did a great job of identifying discrepancies between the project scheduled equipment and the equipment shown on the floor plans as well as pointing out areas where there was not enough space for the mechanical equipment."

North American Mechanical, Inc., USA

India Office Locations

Durgapur - HQ
Pinnacle Infotech Solutions
Bidhannagar, Durgapur, WB 713212
Phone: +91 343 6602222
Fax: +91 343 6602230
Email: info@pinnacleinfotech.com

Madurai
Pinnacle Infotech Solutions
Elcot IT Park, Plot No - 5,6,&7, Vadapalanji,
Madurai, Tamil Nadu, India - 625021
Phone: +91 70100 97363

Jaipur
Pinnacle Infotech Solutions
Mahindra Sez, Jaipur, RJ 302037
Phone: +91 141 722444

Kolkata
Pinnacle Infotech Solutions
Ecospace Business Park, Kolkata 700156
Phone: +91 33 2324 5900

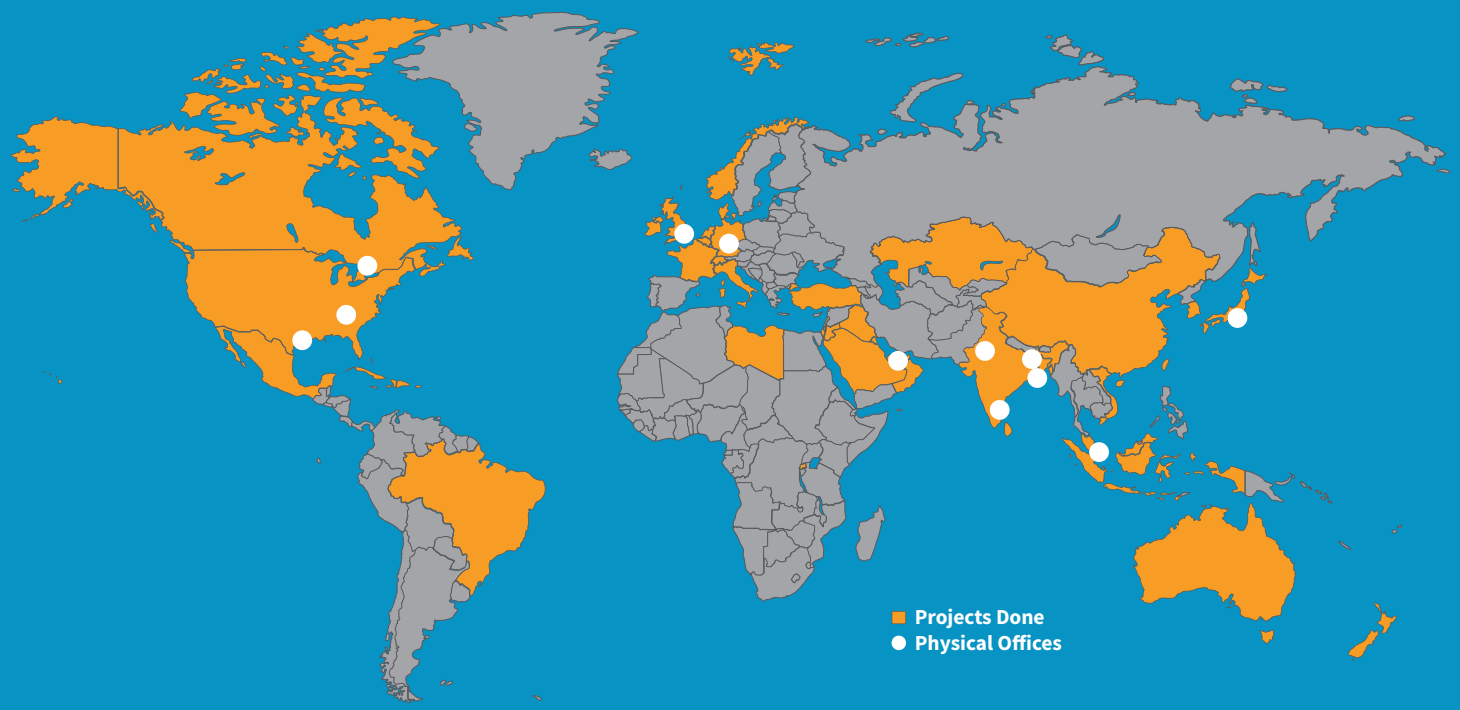

International Office Locations

USA - Houston
Pinnacle Infotech Inc.
50 Sugar Creek Blvd,
Sugar Land, TX 77478
Mr. Biswanath Todi
Phone: +1 713 780 2135
Email: btodi@pinnacleinfotech.com

USA - Atlanta
Pinnacle Infotech Inc.
6065 Roswell Rd NE #625,
Atlanta, GA 30328
Mr. Mickey Cantrell
Phone: +1 270 223 6319
Email: mcantrell@pinnacleinfotech.com

Canada
Pinnacle VDC Inc.
3250 Bloor Street West, East Tower,
Suite 600, Toronto, ON M8X2X9, Canada
Mr. Cory Houle
Phone: +1 613 290 7477
Email: choule@pinnacleinfotech.com

UK
Pinnacle Infotech Limited
The Barley Mow Centre,
London, W4 4PH
Mr. Pat Saha
Phone: +44 79600 26070
Email: psaha@pinnacleinfotech.com

Germany
Pinnacle BIM Technology GmbH
Lilienthalstrasse 27, 85399 Hallbergmoos,
Munich, Germany
Mr. Bernhard Kössler
Phone: +41 79 4393570
Email: bkossler@pinnacleinfotech.com

UAE
Pinnacle Infotech Technologies FZ-LLC
Office No – 307, 3rd Floor, Building No. 7
Dubai Outsource Zone, Dubai, UAE
Mr. Yash Goyal
Phone: +971 52 769 7465
Email: dubai@pinnacleinfotech.com

Singapore
Pinnacle BIM Technology PTE. LTD.
BCA Braddell Campus, 200 Braddell Road,
#13-63, Singapore 579700
Mr. Kuntal Chakraborty
Phone: +65 69508205
Email: kchakraborty@pinnacleinfotech.com

Japan
Pinnacle BIM Technology K.K.
#403 7-1-5, Minamiaoyama, Minato-ku,
Tokyo, Japan, 107-0062
Mr. So Adachi
Phone: +81 80 3008 9453
Email: sadachi@pinnacleinfotech.com

Pinnacle Infotech
Construct Certainty, with Technology

pinnacleinfotech.com